Plastic Leaded Chip Carrier Packages (PLCC)

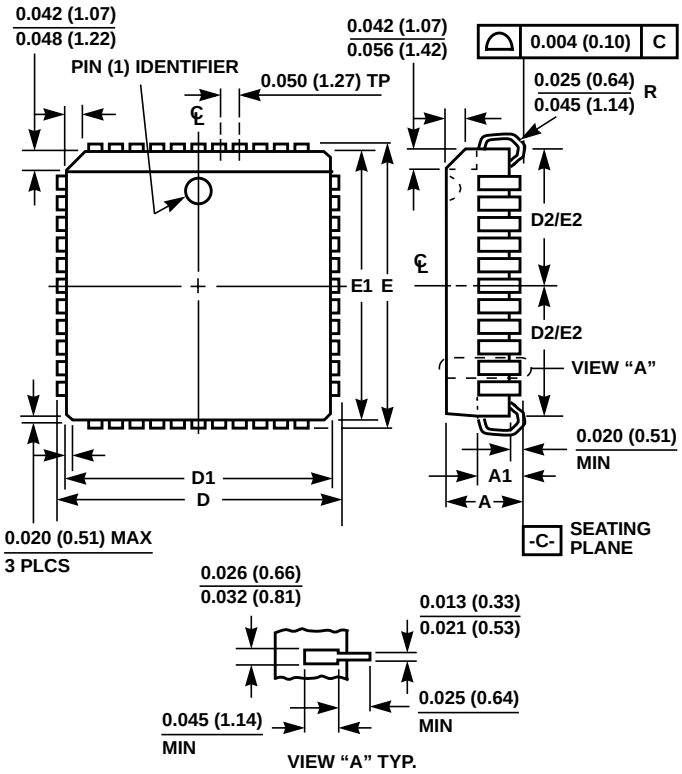

NOTES:

1. Controlling dimension: INCH. Converted millimeter dimensions are not necessarily exact.
2. Dimensions and tolerancing per ANSI Y14.5M-1982.
3. Dimensions D1 and E1 do not include mold protrusions. Allowable mold protrusion is 0.010 inch (0.25mm) per side. Dimensions D1 and E1 include mold mismatch and are measured at the extreme material condition at the body parting line.
4. To be measured at seating plane -C- contact point.
5. Centerline to be determined where center leads exit plastic body.
6. "N" is the number of terminal positions.

N28.45 (JEDEC MS-018AB ISSUE A)
28 LEAD PLASTIC LEADED CHIP CARRIER PACKAGE

SYMBOL	INCHES		MILLIMETERS		NOTES
	MIN	MAX	MIN	MAX	
A	0.165	0.180	4.20	4.57	-
A1	0.090	0.120	2.29	3.04	-
D	0.485	0.495	12.32	12.57	-
D1	0.450	0.456	11.43	11.58	3
D2	0.191	0.219	4.86	5.56	4, 5
E	0.485	0.495	12.32	12.57	-
E1	0.450	0.456	11.43	11.58	3
E2	0.191	0.219	4.86	5.56	4, 5
N	28		28		6

Rev. 2 11/97