Package Outline Drawing

L8.2x2A

8 LEAD THIN DUAL FLAT NO-LEAD PLASTIC PACKAGE (TDFN) WITH E-PAD
Rev 0, 04/08

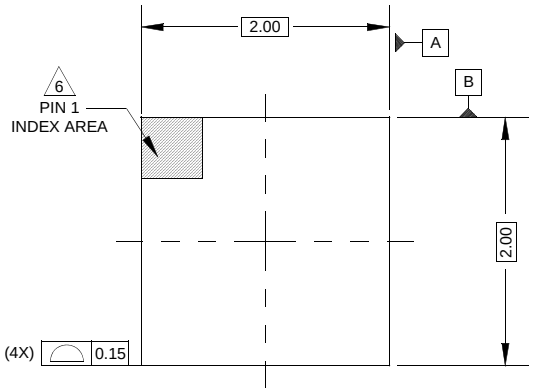

TOP VIEW

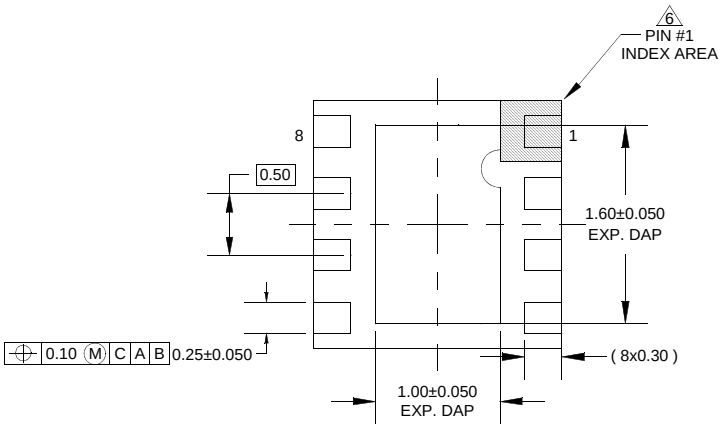

BOTTOM VIEW

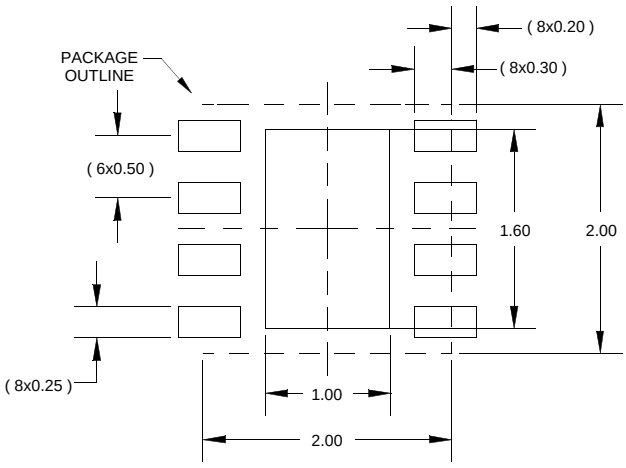

TYPICAL RECOMMENDED LAND PATTERN

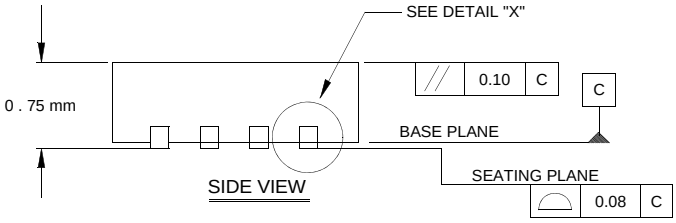

SIDE VIEW

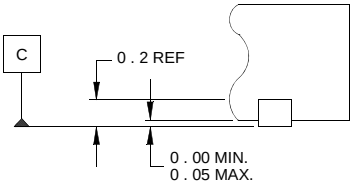

DETAIL "X"

NOTES:

1. Dimensions are in millimeters.
   Dimensions in ( ) for Reference Only.
2. Dimensioning and tolerancing conform to AMSE Y14.5m-1994.
3. Unless otherwise specified, tolerance : Decimal ± 0.05
4. Dimension b applies to the metallized terminal and is measured between 0.15mm and 0.30mm from the terminal tip.
5. Tiebar shown (if present) is a non-functional feature.
6. The configuration of the pin #1 identifier is optional, but must be located within the zone indicated. The pin #1 indentifier may be either a mold or mark feature.